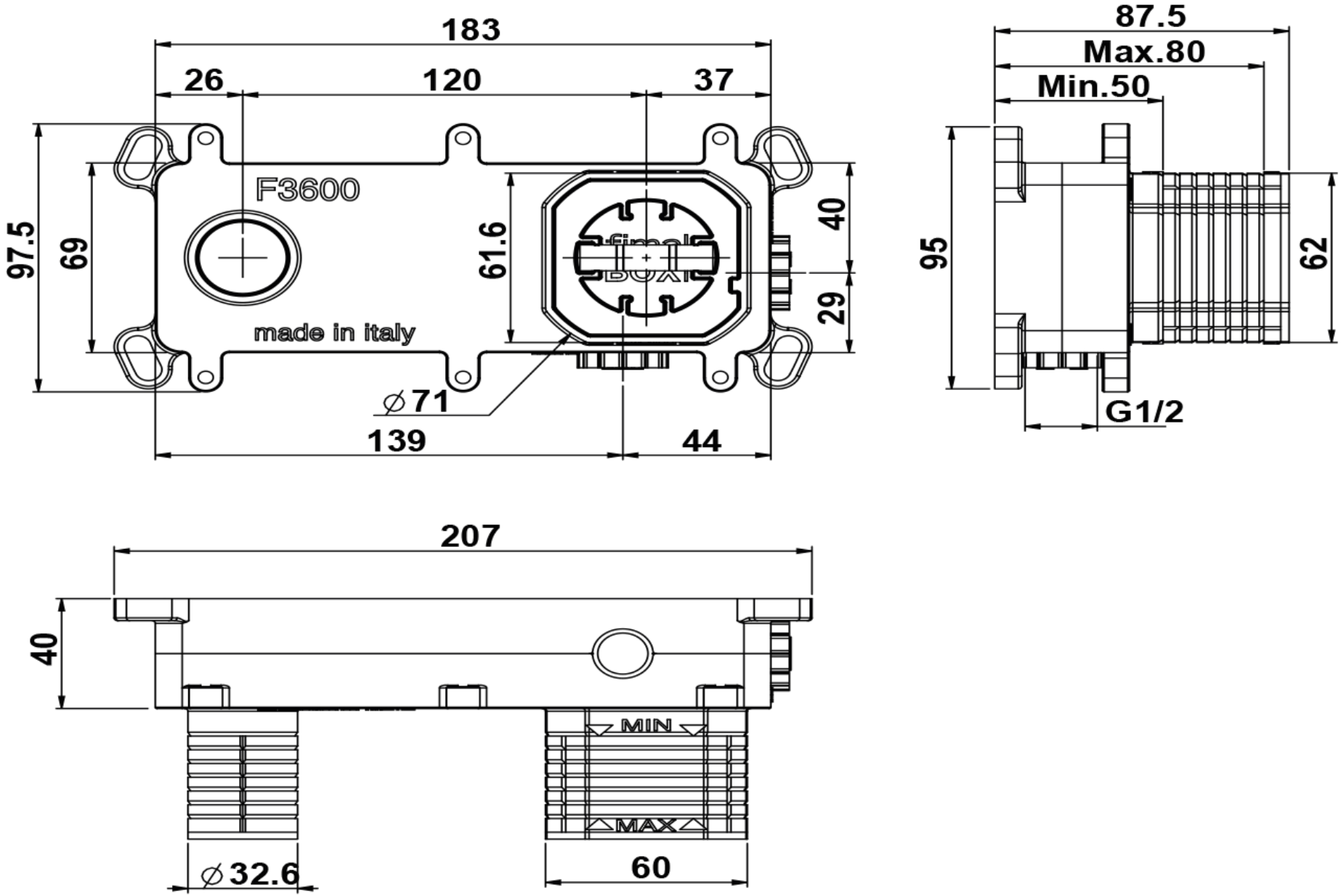
183
26
120
37
97.5
69
F3600
61.6
40
29
made in italy
∅71
139
44
87.5
Max.80
Min.50
95
62
G1/2
207
40
MIN
MAX
∅32.6
60